

PRF0095073A

Hidden 2.0

A sleek, concealed hood available in stainless steel, matte black, and white glass/stainless steel finishes, featuring diffuse LED lighting and touch controls.

Design by **0**

Generic Data

WEIGHT (KG)	FINISHING	DIMENSIONS (CM)
9.6	Stainless Steel	80
ENERGY CLASS	**MINIMUM DISTANCE FROM WALL UNIT INDUCTION/RADIANT HOB**	**MINIMUM DISTANCE FROM WALL UNIT GAS HOB**
A	50cm	65cm
DUCT TRANSITION	**LIGHTING**	**ABSORPTION**
150mm	Strip Led 1x7 W - 3500 K - 421 LUX	277W

Extraction

AIRFLOW MIN-MAX	NOISE LEVEL MIN-MAX	CONTROLS
300m³/h - 690m³/h	51db(A) - 67db(A)	3S+B Electronic push button

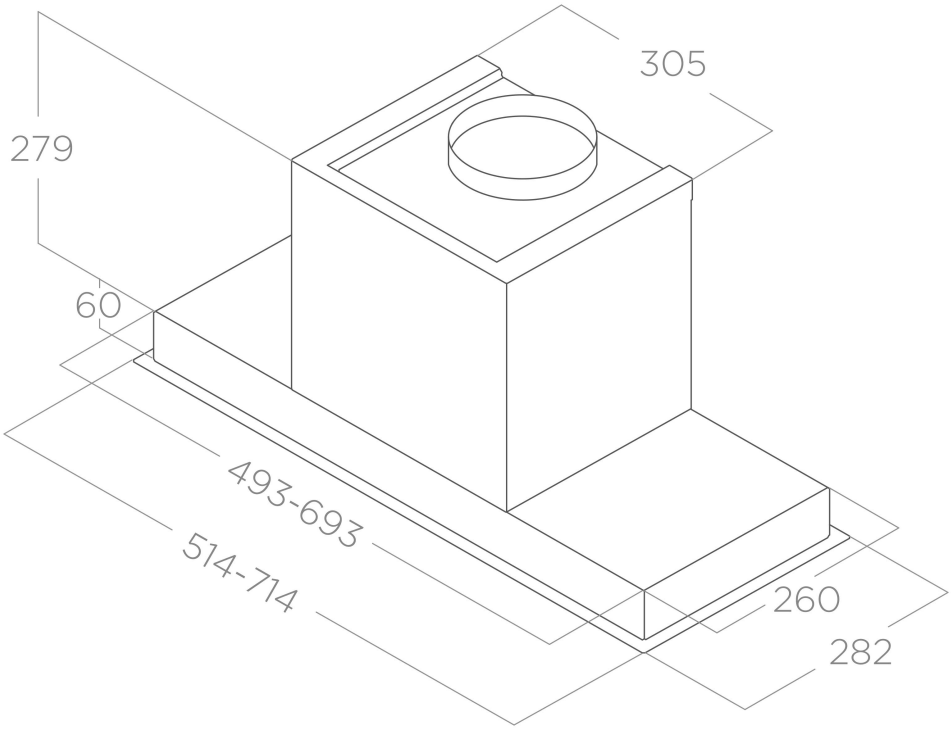
305
279
60
493-693
514-714
260
282

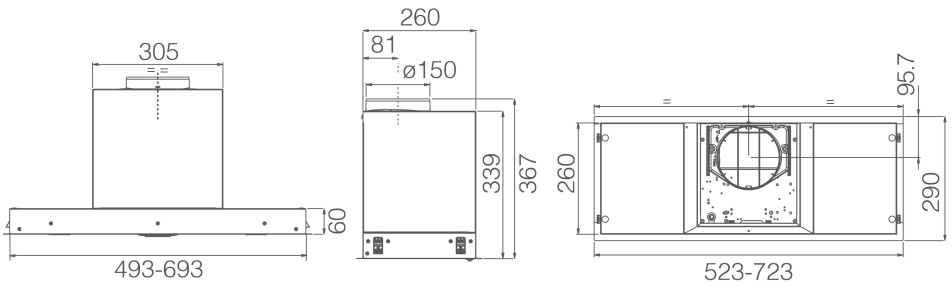
260
81
305
ø150
95.7
339
367
260
290
60
493-693
523-723