

PRF0157394

Lane

Designed to be installed inside the wall cabinet, this built-in hood delivers high performance.

Design by **0**

Generic Data

WEIGHT (KG)

11.3

FINISHING

White

DIMENSIONS (CM)

80

ENERGY CLASS

B

MINIMUM DISTANCE FROM WALL UNIT INDUCTION/RADIANT HOB

45cm

MINIMUM DISTANCE FROM WALL UNIT GAS HOB

50cm

DUCT TRANSITION

150mm

LIGHTING

Strip Led 1x7 W - 3500 K - 365 LUX

ABSORPTION

257W

Extraction

AIRFLOW MIN-MAX

255m³/h - 650m³/h

NOISE LEVEL MIN-MAX

49db(A) - 65db(A)

CONTROLS

3S+B Electronic push button

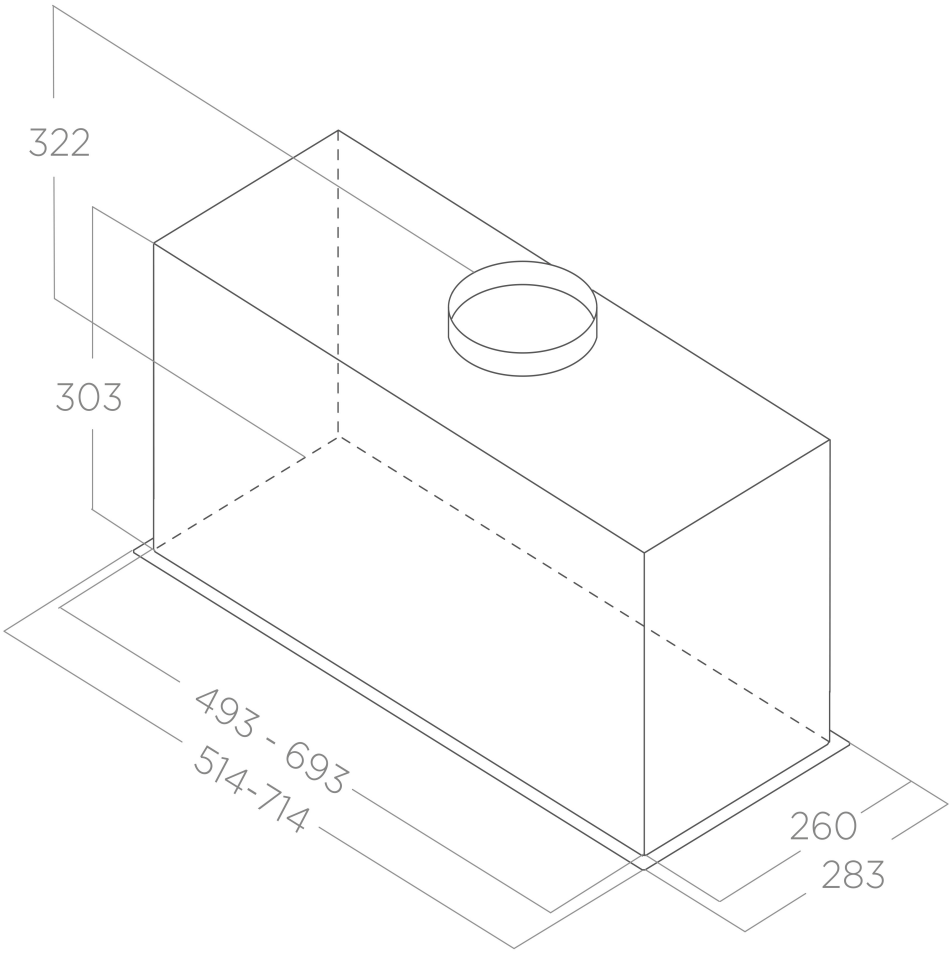
322
303
493 - 693
514-714
260
283

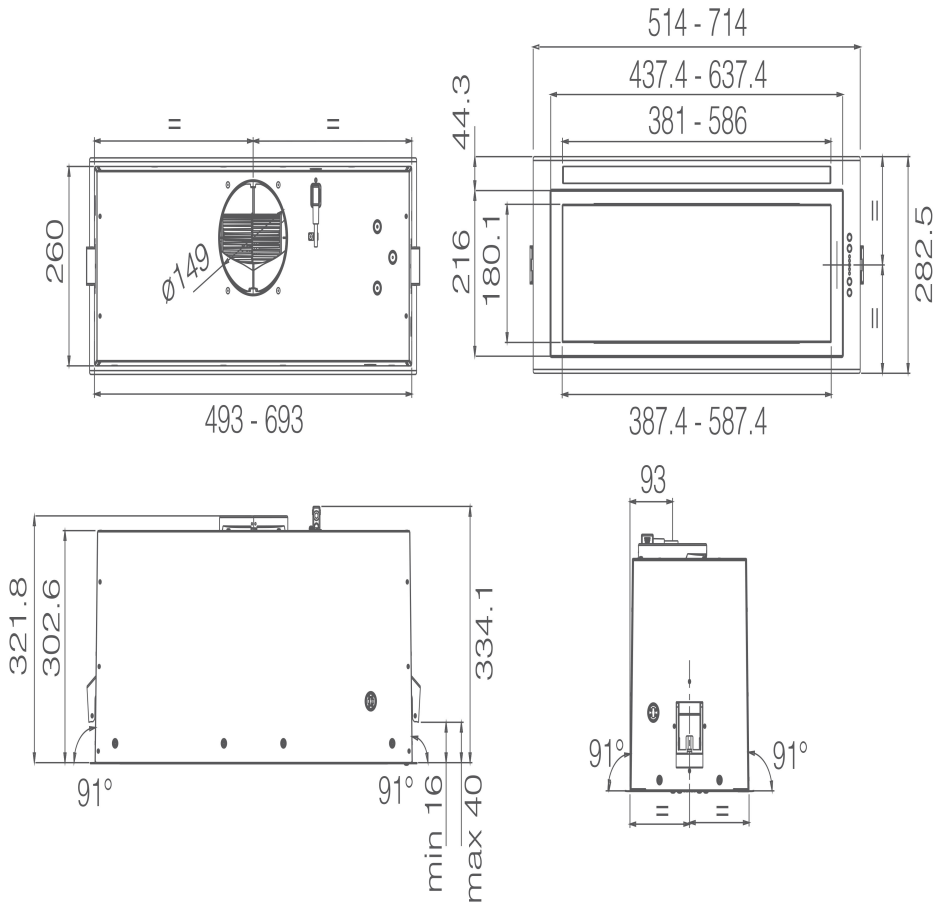
514 - 714
437.4 - 637.4
381 - 586
44.3
260
ø149
216
180.1
282.5
493 - 693
387.4 - 587.4
93
321.8
302.6
334.1
91°
91°
min 16
max 40
91°
91°