

PRF0157333

Lane

Designed to be installed inside the wall cabinet, this built-in hood delivers high performance.

Design by **0**

Generic Data

WEIGHT (KG)	FINISHING	DIMENSIONS (CM)
9.4	Stainless Steel	60
ENERGY CLASS	**MINIMUM DISTANCE FROM WALL UNIT INDUCTION/RADIANT HOB**	**MINIMUM DISTANCE FROM WALL UNIT GAS HOB**
B	45cm	50cm
DUCT TRANSITION	**LIGHTING**	**ABSORPTION**
150mm	Strip Led 1x7 W - 3500 K - 365 LUX	257W

Extraction

AIRFLOW MIN-MAX	NOISE LEVEL MIN-MAX	CONTROLS
255m³/h - 650m³/h	49db(A) - 65db(A)	3S+B Electronic push button

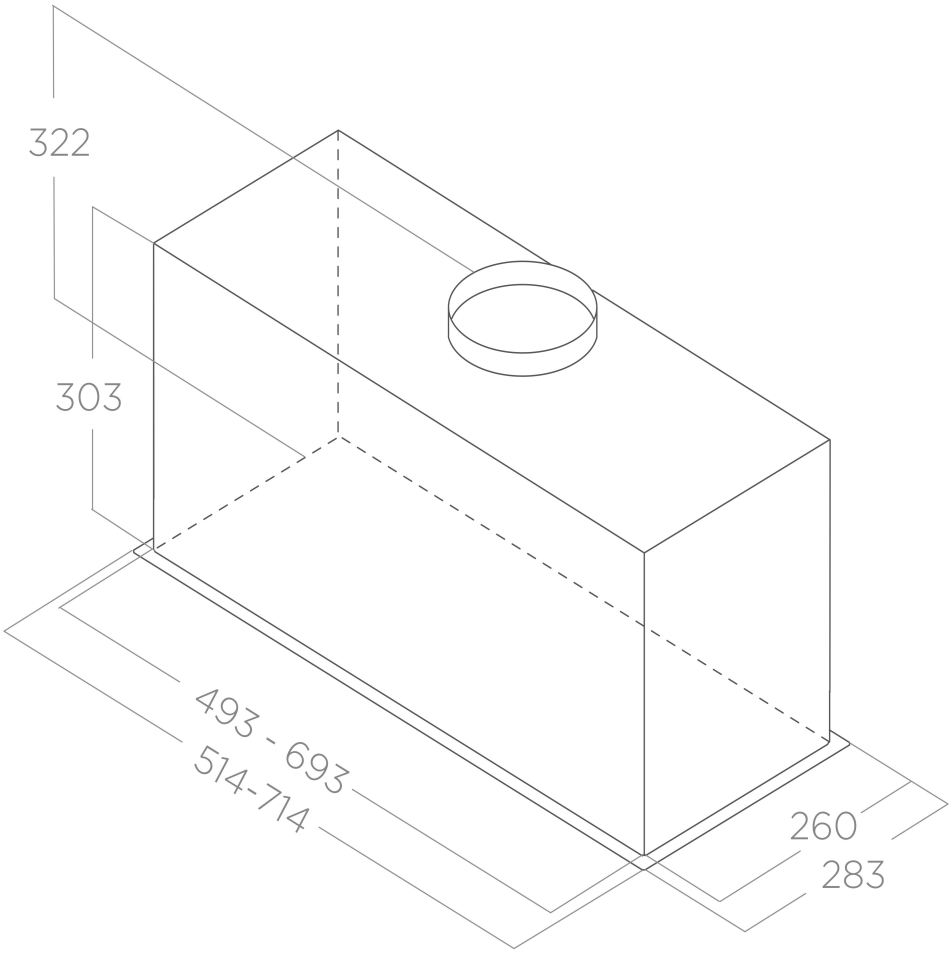
322
303
493 - 693
514-714
260
283

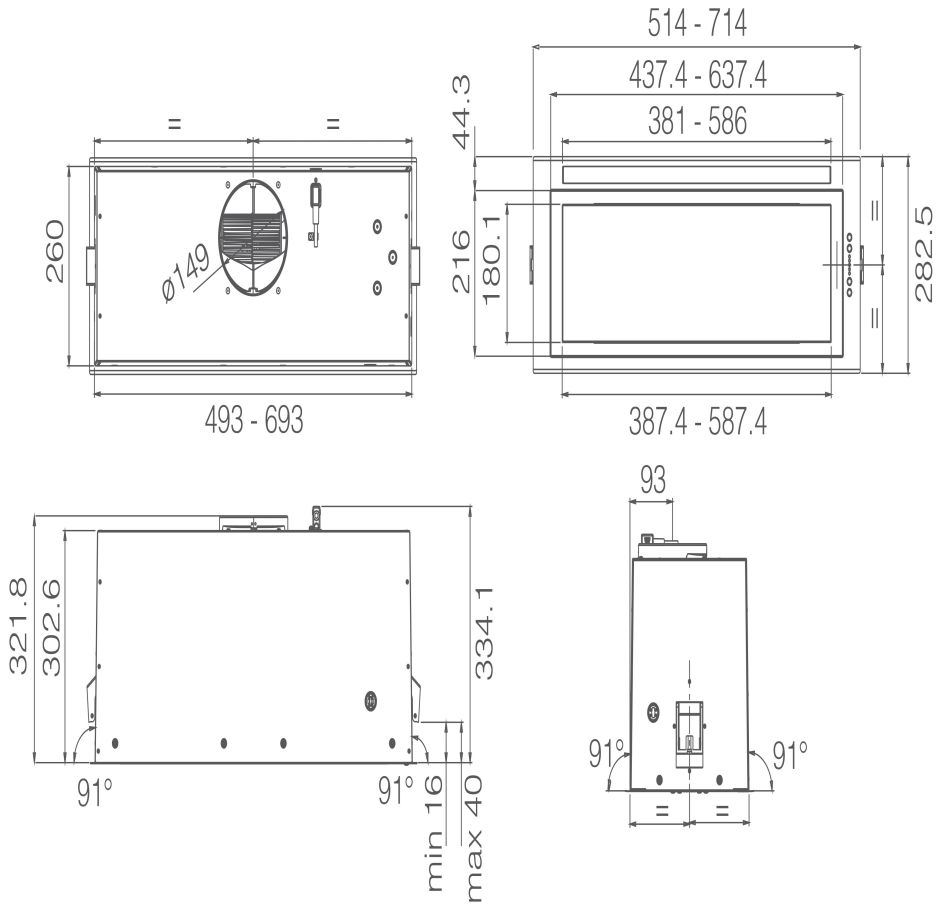
514 - 714
437.4 - 637.4
381 - 586
44.3
260
ø149
216
180.1
282.5
493 - 693
387.4 - 587.4
93
321.8
302.6
334.1
91°
91°
min 16
max 40
91°
91°