

PRF0196339

NikolaTesla Libra

Making food is now even easier with this three-in-one appliance: an induction hob, integrated hood and scale finally together.

Design by **Design Fabrizio Crisà**

Generic Data

WEIGHT (KG)

22.4

FINISHING

White glass "ice grey" + cast iron

DIMENSIONS (CM)

83x51,5x21

ENERGY CLASS

A+

CUT OUT

80,7x49,2 cm

TOTAL ABSORPTION

7,4 kW

Extraction

AIRFLOW MIN DUCT-OUT

160m³/h

AIRFLOW MAX DUCT-OUT

480m³/h

AIRFLOW BOOST DUCT-OUT

600m³/h

AIRFLOW MIN FILTERING

145m³/h

AIRFLOW MAX FILTERING

435m³/h

AIRFLOW FILTERING

550m³/h

SUCTION SPEED

5.1m/s

NOISE LEVEL MIN-MAX ASPIRATION

38db(A) - 64db(A)

NOISE LEVEL MIN-MAX FILTER

41db(A) - 67db(A)

CONTROLS

4S+B Slider touch control

ABSORPTION

160 W

Cooking

CONTROLS

9P+B slider touch control

VOLTAGE

220-240V / 380-415V 2N / 380-415V 3N

POWER LIMITATION

3,1kW - 4,5kW

NUMBER OF BRIDGE ZONES

2

FRONT LEFT COOKING ZONE

OCTA 21x19,1 cm - 1,65/1,85 kW

RIGHT FRONT COOKING ZONE

OCTA 21x19,1 cm - 1,65/1,85 kW

REAR LEFT COOKING ZONE

OCTA 21x19,1 cm - 2,1/3 kW

REAR RIGHT COOKING ZONE

OCTA 21x19,1 cm - 2,1/3 kW

NIKOLA TESLA LIBRA 83 cm

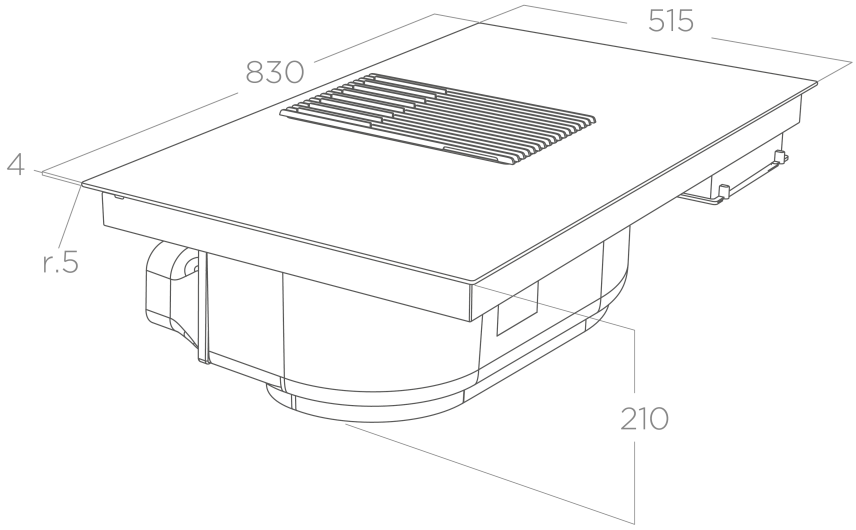

NIKOLA TESLA LIBRA 83 cm

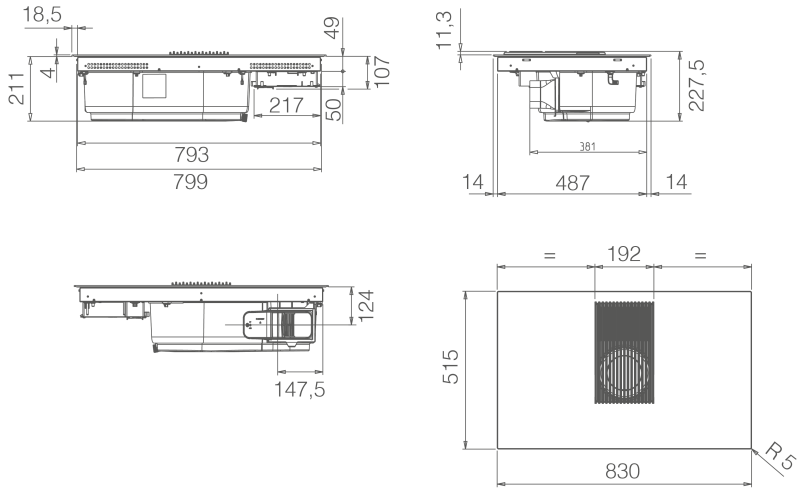

NIKOLA TESLA LIBRA 83 cm

