

Hidden 2.0

A sleek, concealed hood available in stainless steel, matte black, and white glass/stainless steel finishes, featuring diffuse LED lighting and touch controls.

Design by **0**

Generic Data

WEIGHT (KG)

8.7

FINISHING

Black Matte

DIMENSIONS (CM)

60

ENERGY CLASS

A

MINIMUM DISTANCE FROM WALL UNIT INDUCTION/RADIANT HOB

50cm

MINIMUM DISTANCE FROM WALL UNIT GAS HOB

65cm

DUCT TRANSITION

150mm

LIGHTING

Strip Led 1x7 W - 3500 K - 421 LUX

ABSORPTION

277W

Extraction

AIRFLOW MIN-MAX

300m³/h - 690m³/h

NOISE LEVEL MIN-MAX

51db(A) - 67db(A)

CONTROLS

3S+B Electronic push button

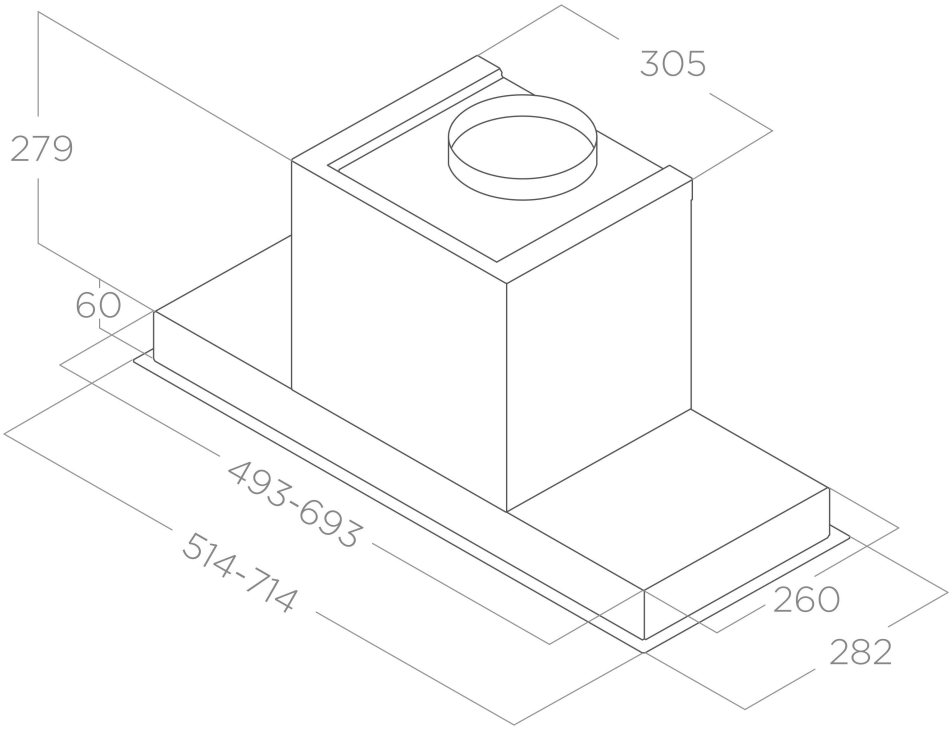
305
279
60
493-693
514-714
260
282

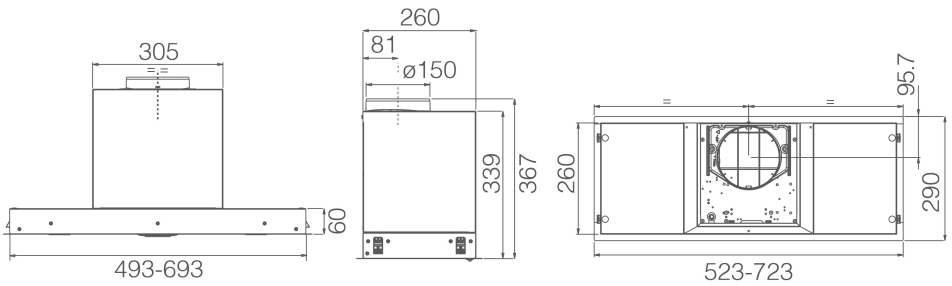
260
81
305
ø150
95.7
339
367
260
290
60
493-693
523-723